CENTER PIN DIAMETER: ∅0.65mm

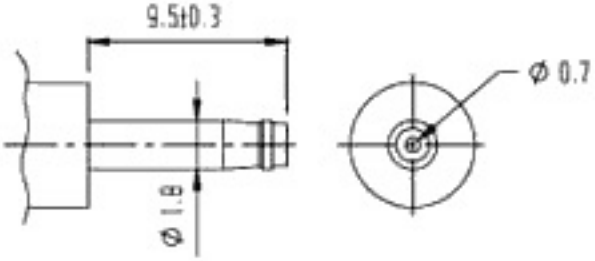

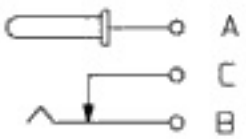

SCHEMATIC

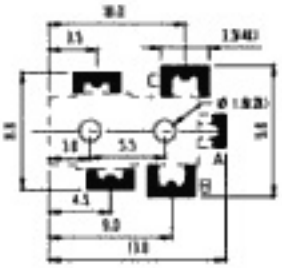

P.C.B. LAYOUT

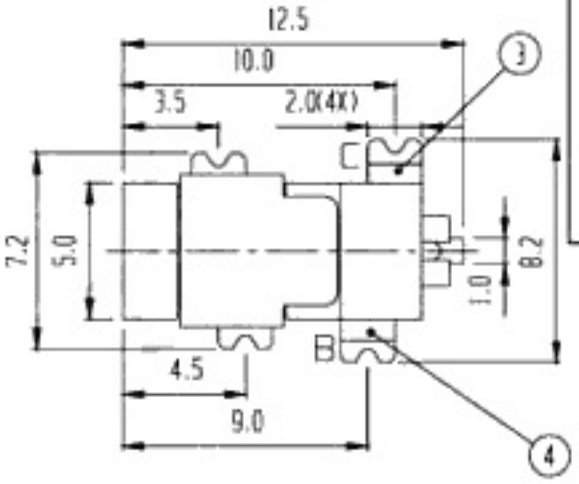

RoHS Compliance

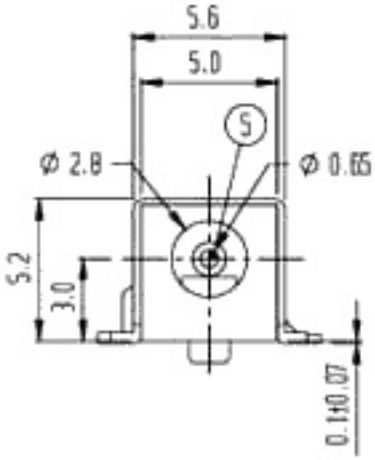

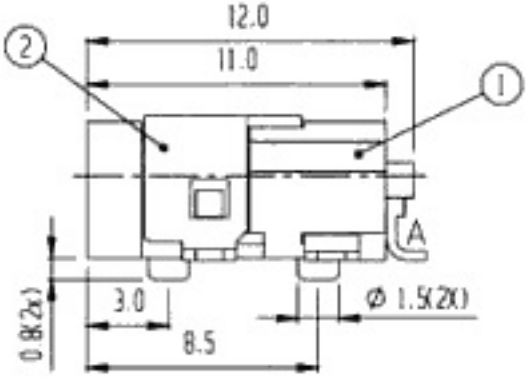

NO.	PART	MATERIAL	QTY	REMARKS	NO.	PART	MATERIAL	QTY	REMARKS
5	CENTER PIN	P B S	1	Ag PLATED					
3	TERMINAL	BRASS	1	Ag PLATED	4	TERMINAL	P B S	1	Ag PLATED
1	FRAME	NYLON 6T	1	BLACK	2	TERMINAL	SPCC	1	Ni PLATED

ISSUED	SPECIFICATION	TITLE: DC POWER JACK SMD			
	RATING: DC 30V 0.3A	MODEL NO: DCM-028			
	CONTACT RESISTANCE: 50mΩ max.				
	INSULATION RESISTANCE: 100MΩ AT 500V DC	TOLERANCE	UNIT: MM	DWN.	
	WITHSTAND VOLTAGE: AC 250V for 1 minute	UP TO 1.0:±0.1	SCALE: 4:1	CHK'D.	
	OPERATION FORCE: REFER ATTACH SPECIFICATION	1.0 TO 10.0:±0.2	VERSION: 03		
	SWITCHING LIFE: 5,000 cycles min.	OVER 10.0:±0.3	DRWG NO: 001	APPD.	