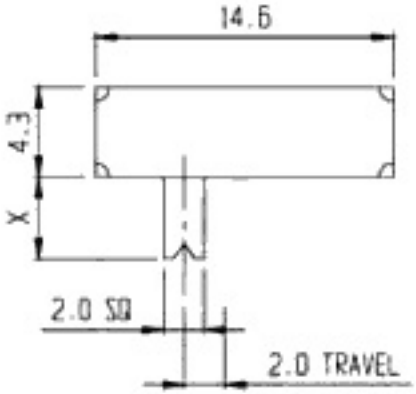

SCHEMATIC

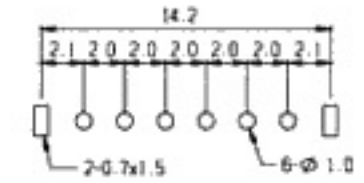

PCB LAYOUT

RoHS Compliance

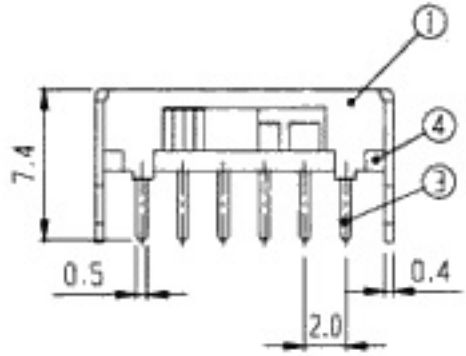

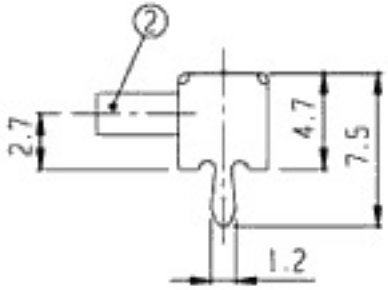

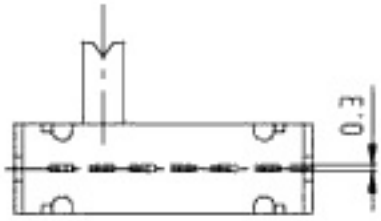

NO	PART	MATERIAL	QTY	REMARKS	NO	PART	MATERIAL	QTY	REMARKS
5	CONTACT	P B S	1	Ag PLATED	6	SPRING PLATE	P B S	1	
3	TERMINAL	BRASS	6	Ag PLATED	4	TERMINAL BASE	PHENOL RESIN	1	NATURAL
1	FRAME	S P C C	1	Ni PLATED	2	KNOB	P O M	1	VG 2-7

ISSUED	SPECIFICATION	TITLE: SIDE KNOB SLIDE SWITCH (1P4T)			
	RATING: DC 30V 0.5A	MODEL NO: SK-14D13 (VG)			
	CONTACT RESISTANCE: 30mΩ max.				
	INSULATION RESISTANCE: 500MΩ at 500V DC	TOLERANCE	UNIT: MM	DWN.	
	WITHSTAND VOLTAGE: AC 500V for 1 minute	UP TO 1.0:±0.1	SCALE: 3:1	CHK'D.	
	OPERATION FORCE: REFER ATTACH SPECIFICATION	1.0 TO 10.0:±0.2	VERSION: 2		
	SWITCHING LIFE: 10K cycles min.	OVER 10.0:±0.3	DRWG NO:	APPD.	