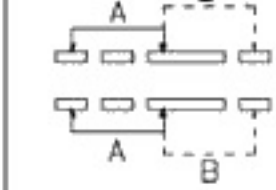

SCHEMATIC

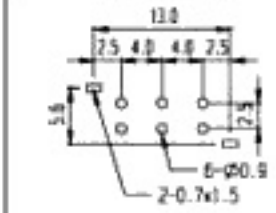

PCB LAYOUT

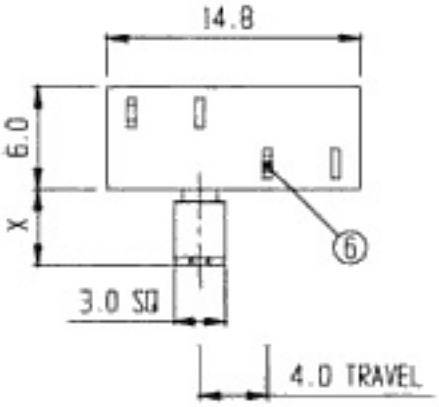

RoHS Compliance

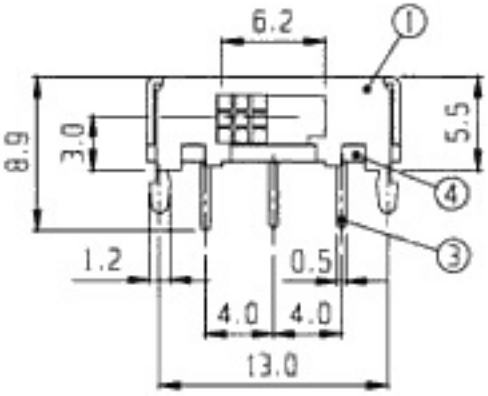

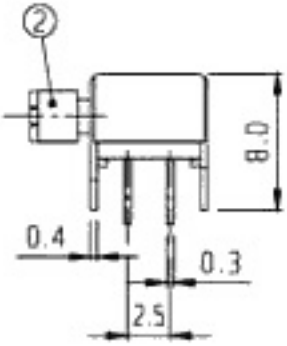

NO	PART	MATERIAL	QTY	REMARKS	NO	PART	MATERIAL	QTY	REMARKS
5	CONTACT	P B S	2	Ag PLATED	6	SPRING PLATE	P B S	1	
3	TERMINAL	BRASS	6	Ag PLATED	4	TERMINAL BASE	PHENOL RESIN	1	NATURAL
1	FRAME	S P C C	1	Ni PLATED	2	KNOB	P O M	1	PG 2-9

ISSUED	SPECIFICATION	TITLE: SIDE KNOB SLIDE SWITCH (2P2T)			
	RATING: DC 30V 0.3A CONTACT RESISTANCE: 30mΩ max.	MODEL NO: SK-22H05 (PG)			
	INSULATION RESISTANCE: 500MΩ at 500V DC	TOLERANCE	UNIT: MM	DWN.	
	WITHSTAND VOLTAGE: AC 500V for 1 minute	UP TO 1.0:±0.1	SCALE: 2.5:1	CHK"D.	
	OPERATION FORCE: REFER ATTACH SPECIFICATION	1.0 TO 10.0:±0.2	VERSION: 03		
	SWITCHING LIFE: 10K cycles min.	OVER 10.0:±0.3	DRWG NO:	APPD.	