REV	MODIFICATION	DATE	DRAW	APPROVE
A	NEW DWG	2007.07.04	HUANG	KEVIN

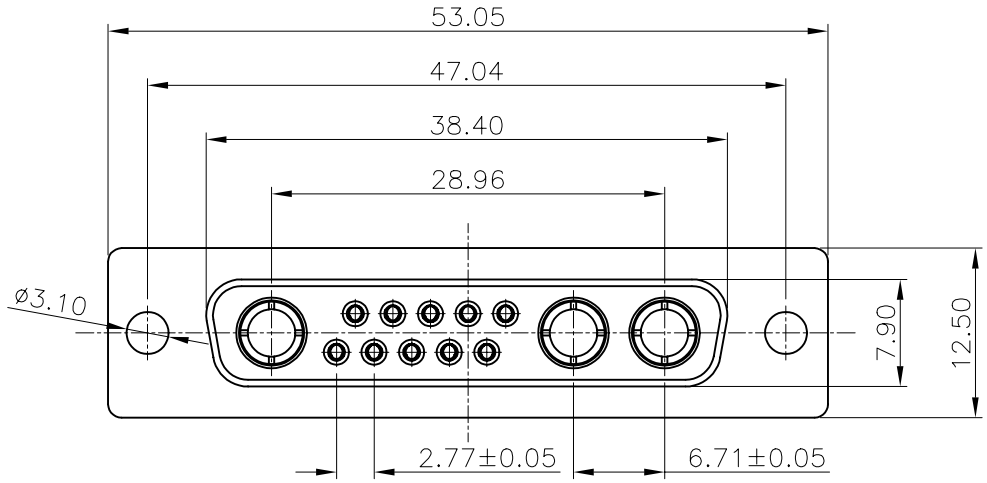

NOTES
1:MATERIAL:
SHELL: STEEL
HOUSING: PBT+30%G.F, BLACK, UL94V-0
CONTACT: PHOSPHOR BRONZE
2:FINISH:
SHELL: NICKEL PLATING
CONTACT PLATING: GOLD PLATING
3:SPECIFICATION:
CURRENT RATING: 7.5A-40A
VOLTAGE RATING: 300V
CONTACT RESISTANCE: 20mΩ
WITHSTANDING VOLTAGE:1000V
INSULATION RESISTANCE: 5000MΩ
OPERATING TEMPERATURE: -55°C~105°C

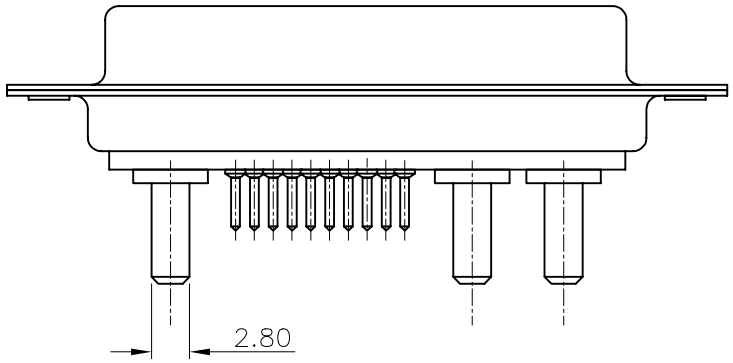

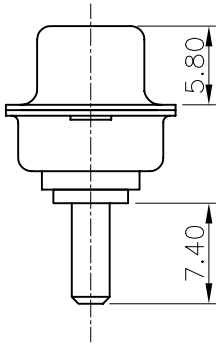

-TOLERANCES- UNLESS OTHERWISE SPECIFIED							
			TITLE:13W3 FEMALE 插板成品				
X.X ±0.30	X.X° ±3°	APPD: KEVIN	PRODUCT NO: 133-013FPXMK01				
X.XX ±0.15	X.XX° ±1°	CHECK: TENA	DATE	SCALE	UNIT	TYPE	PAGE
X.XXX ±0.10	X.XXX° ±0.5°	DRAW: HUANG	2007.07.04	FREE	MM	Y	1/1