REV	MODIFICATION	DATE	DRAW	APPROVE
A	ENXXXXXXX	2007.07.05	HUANG	KEVIN

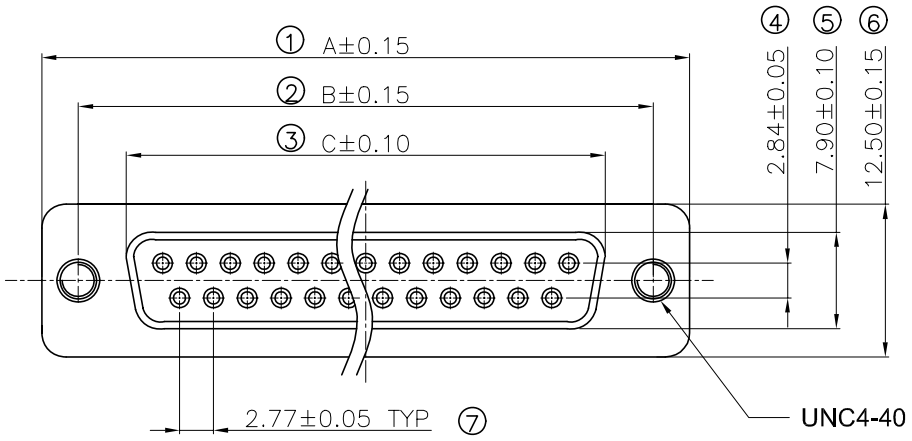

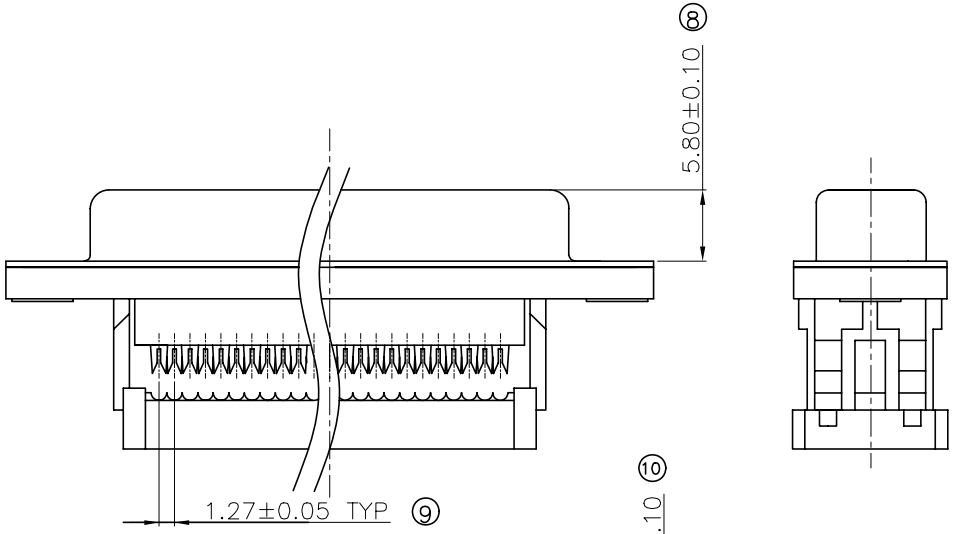

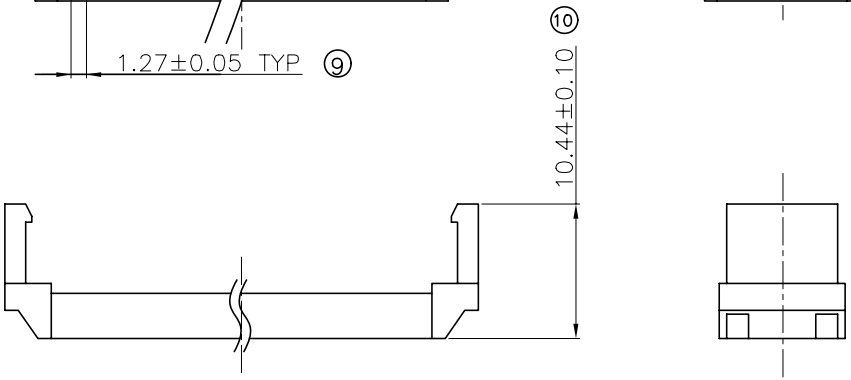

NOTES
MARK Ⓧ IS MAJOR TEST DIMENSION
1:MATERIAL:
HOUSING: PBT+30%GF, UL94V-0
CONTACT: BRASS
2:FINISH:
CONTACT PLATING: GOLD PLATING
3:SPECIFICATION:
CURRENT RATING: 1A MAX
CONTACT RESISTANCE: 30mΩ
WITHSTANDING VOLTAGE: AC 500V 60s
INSULATION RESISTANCE: 1000MΩ 500V AC

PIN NO.	DIM A	DIM B	DIM C	P/N
9P	30.80	25.00	16.35	112-009FBGPK01
15P	39.20	33.30	24.70	112-015FBGPK01
25P	53.05	47.04	38.40	112-025FBGPK01
37P	69.40	63.50	54.80	112-037FBGPK01

-TOLERANCES-
UNLESS OTHERWISE SPECIFIED
公差參考表

X.X ±0.25	X.X° ±3°
X.XX ±0.15	X.XX° ±1°
X.XXX ±0.05	X.XXX° ±0.5°

TITLE: 產品名稱： DIDC 1.0 FEMALE 成品

APPD: 核准： KEVIN	PRODUCT NO: 產品編號： 112-XXXFBXPK01				
CHECK: 校對： TENA	DATE	SCALE	UNIT	TYPE	PAGE
DRAW: 繪圖： HUANG	2007.07.05	FREE	MM	H	1/2