REV	MODIFICATION	DATE	DRAW	APPROVE
A	NEW DWG	07/08/10	HUANG	KEVIN

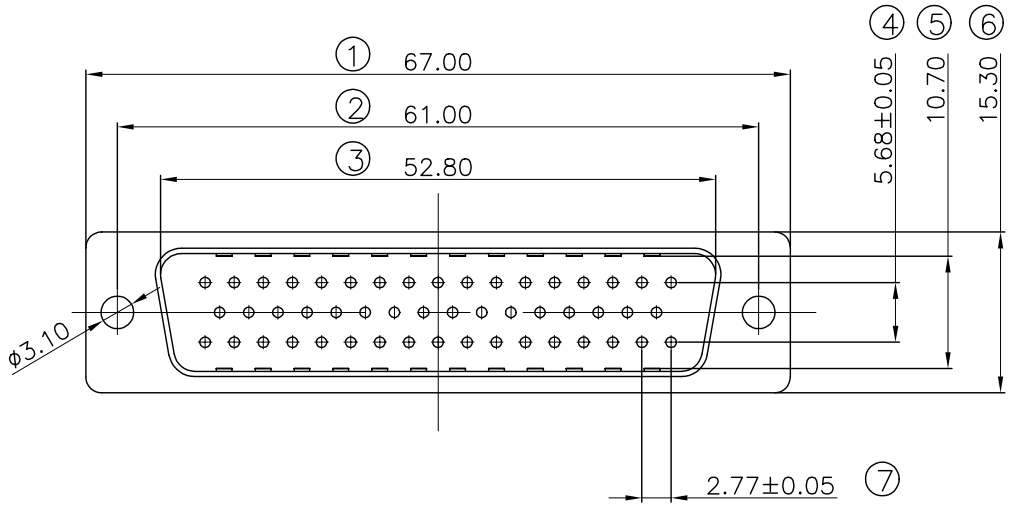

NOTES
1.MATERIAL:
SHELL: STEEL
HOUSING & COVER: PBT+30%G.F
CONTACT: BRASS
2.FINISH:
SHELL: NICKEL PLATING
CONTACT: GOLD PLATING OVER NICKEL UNDERPLATED
3.SPECIFICATION:
CURRENT RATING: 5A
DIELECTRIC STRENGTH: 1000V
INSULATION RESISTANCE: 1000MΩ MIN. AT 500V DC
TEMPERATURE: −55°C~105°C

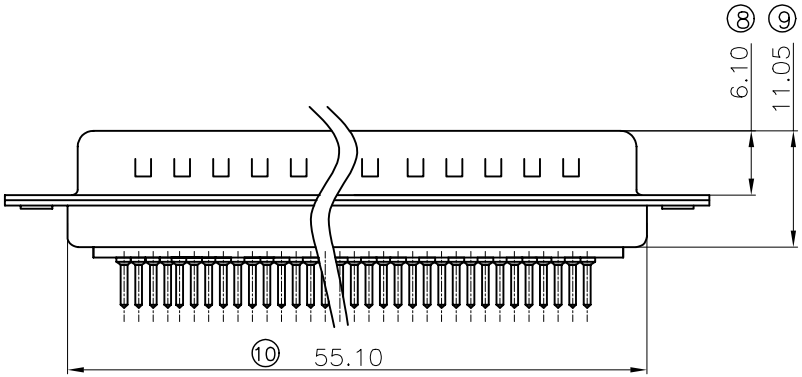

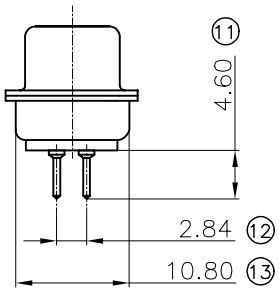

-TOLERANCES- UNLESS OTHERWISE SPECIFIED 公差參考表			TITLE: 產品名稱： HDP 50P DIP180° MALE成品				
X.X ±0.25	X.X° ±3°	APPD: 核准： KEVIN	PRODUCT NO: 產品編號： 163-050MBXMK01				
X.XX ±0.15	X.XX° ±1°	CHECK: 校對： TENA	DATE	SCALE	UNIT	TYPE	PAGE
X.XXX ±0.05	X.XXX° ±0.5°	DRAW: 繪圖： HUANG	2007.08.10	FREE	MM	H	1/2