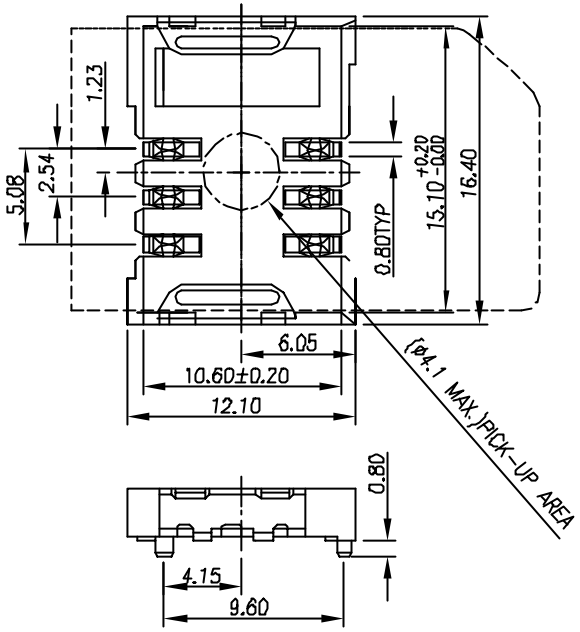

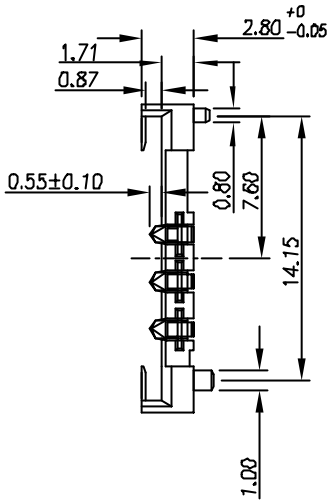

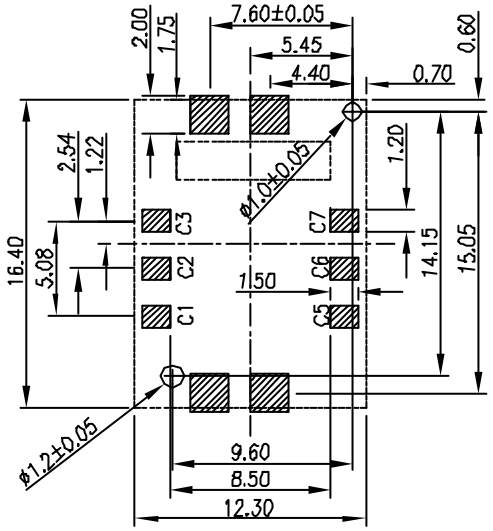

P.C.B. LAYOUT (TOLERANCES:±0.15mm)

REV	MODIFICATION	DATE	DRAW

NOTES:

1.General Characteristics
Dimensions:12.10Lx16.40Wx2.80H mm
Weight: Approx. 0.5g
Contact principle:Friction technology
Operating position:Shaft up/Down/Horizontal
Mounting System:SMT Type(post optional)
Durability:10,000 cycles min.

2.Mechanical Characteristics
Insulation material:Thermoplastic,UL94V-0

3.Electrical Chatacteristics
Number of contacts:6 pins
Contact resistance:50mΩ typical,100mΩmax
Insulation resistance:>1000MΩ/500VDC

6.ORDER INFORMATION
SIMMP-00630B013-G

DIMENSION IN mm [Inch]		PROD. SPEC.	
TOLERANCE UNLESS OTHERWISE SPECIFIED		PKG. SPEC.	
.X±0.15	X.°±	APPROVE	
.XX±0.15	.X°±	CHECK	
.XXX±0.15	.XX°±	DRAW	

TITLE SIM CARD CONNECTOR		CUSTOMER DRAWING	
FILE NO.	DWG NO. SIMMP-00630B013-G		
SIZE A4	PROJ.	SHEET 1 / 1	
	SCALE 2.5:1	REV A	

8F-01-R10